PRODUCT SHEET

Description:
Glass Door Lock "Frigg II" F/8-12mm, no Cutting, KA, Black Finish, SS304, W/Striker

Item number:
14.09.808-4

Units	Box	Carton	HS Code	Barcode
Pcs.			8302415000	5704866523554

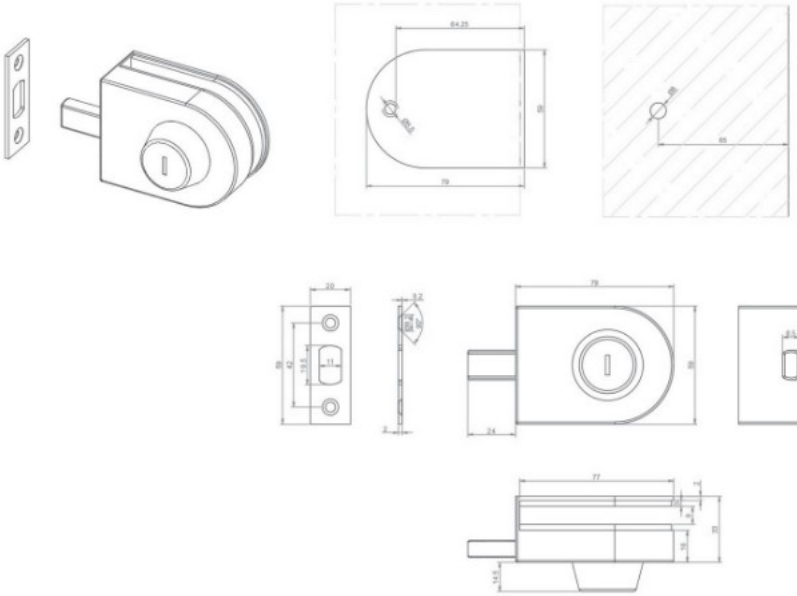

SISO A/S
Mileparken 11
DK-2740 Skovlunde
Denmark
VAT: 24786013

Phone +45 45 830 900

www.siso.dk
siso@siso.dk

Danske Bank
Nytorv Branch
Copenhagen
SWIFT: DABADKKK

Account no.
4180 3112 112936
IBAN Account
DK7230003112112936